PART VOLUME: CU. IN.
PART WEIGHT: LBS.

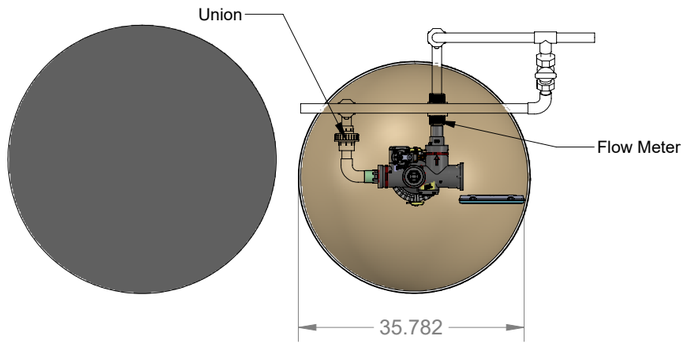

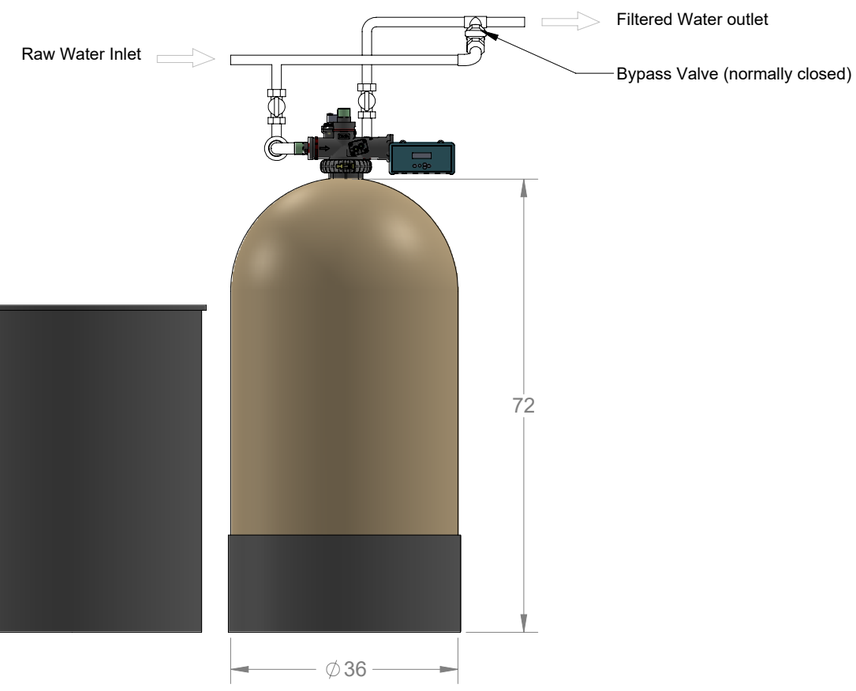

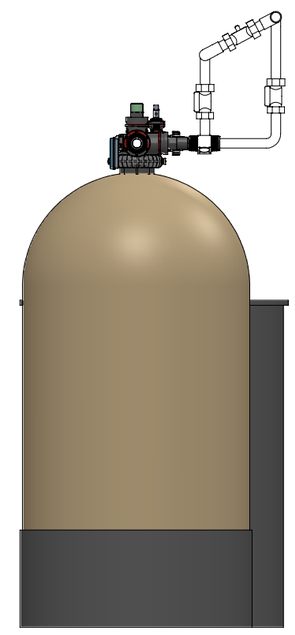

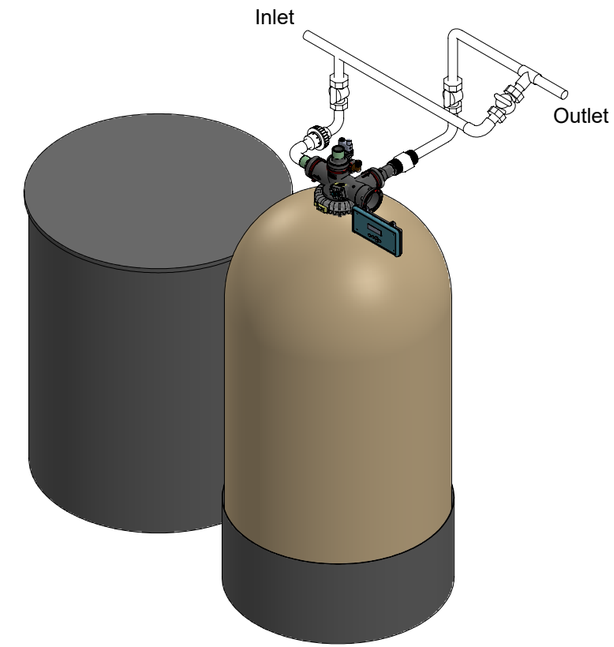

Notes:

All piping, fittings etc are provided by other

General plumbing connections are shown for clarity only

ALL RAW MATERIALS AND COMPONENTS USED IN THE MANUFACTURE OF THIS ITEM SHALL COMPLY WITH ECOWATER SYSTEMS ES 30658

© 2014 ECOWATER SYSTEMS

UNLESS OTHERWISE SPECIFIED, ALL DIMENSIONS ARE IN INCHES

THIS PRINT, INCLUDING ALL INFORMATION SET FORTH THEREON, IS THE PROPERTY OF ECOWATER SYSTEMS AND IS LOANED IN CONFIDENCE SUBJECT TO RETURN UPON REQUEST AND WITH THE UNDERSTANDING THAT NO COPIES OF THIS PRINT OR OF THE INFORMATION SHALL BE MADE WITHOUT THE PRIOR WRITTEN CONSENT OF ECOWATER SYSTEMS. ALL RIGHTS TO DESIGN AND INVENTION ARE RESERVED.

DATE	APRV.	REV	EN. NO.	REVISION RECORD
		A		Release to production

PART NUMBER

MATL

NEXT ASSMEBLY REFERENCE

TOLERANCE UNLESS NOTED
ONE PLACE (.0) +/- .020
TWO PLACE (.00) +/- .010
THREE PLACE (.000) +/- .005
ANGLES +/- 0° 30'

DO NOT SCALE DRAWING

SCALE 1:24
DRAWN BY
CHK'D BY
PROJ ENG
APPROVAL

PART NAME

SIZE B

PART NUMBER **PA362CS**

REV

ECOWATER SYSTEMS®